REVISIONS				
ZONE	REV	DESCRIPTION	DATE	APPROVED
	C	REDRWN, SPARGER REV'D	24FEB03	

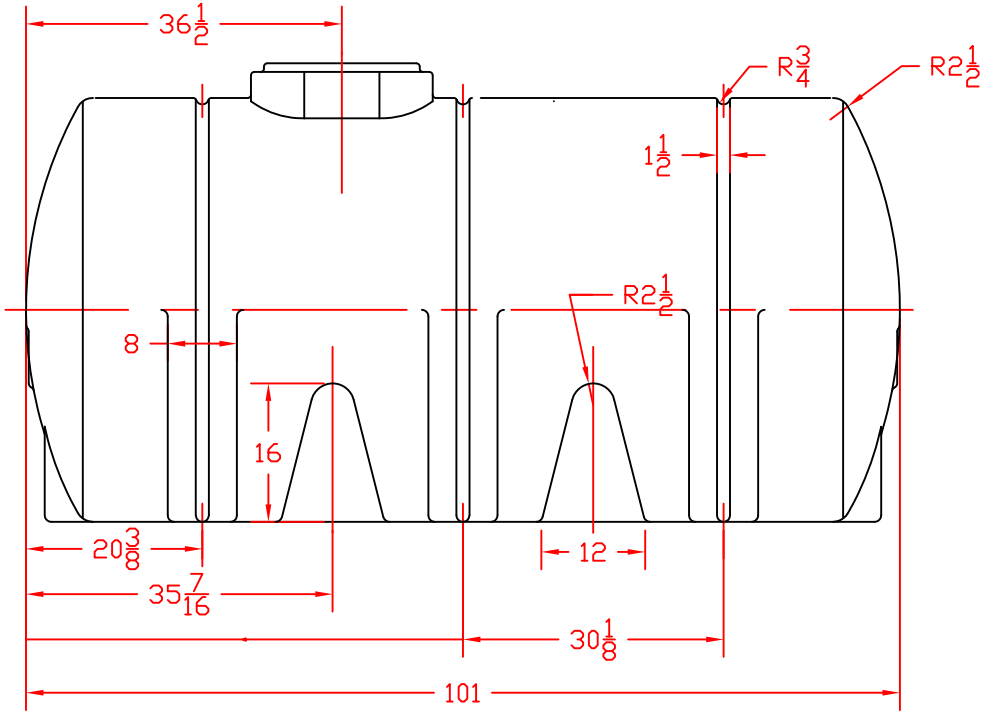

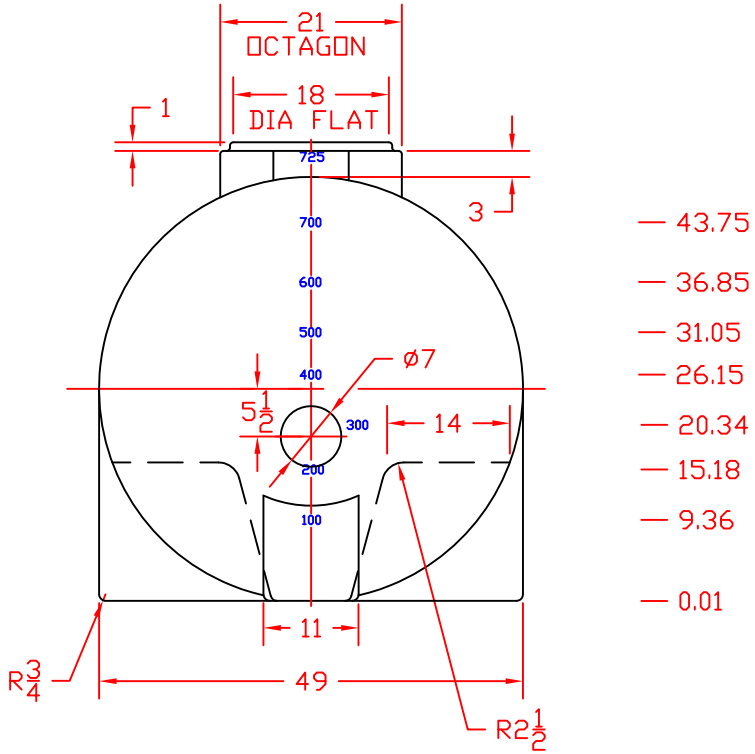

GALLON MARKS ONE END

FOB GRIFFIN, GA, LANCASTER, OH & OWEGO, NY

NORWESCO
ST. BONIFACIUS, MN

725 GALLON HORIZONTAL LEG TANK

JTP 24FEB03	SIZE B	FSCM NO.	DWG NO.	REV C
	SCALE 1/16		SHEET	